DESIGN AND IMPLEMENTATION OF A TWO-STAGE MILLER COMPENSATED OPERATIONAL AMPLIFIER IN 90nm CMOS

Project Documentation

Prepared by:

Pennam Yaswanth

Email: yaswanth6205@gmail.com
Contact: 9391728520

April 2026

Contents

1 INTRODUCTION TO ANALOG DESIGN AND OPERATIONAL AMPLIFIERS 1

1.1 Overview of Amplification 1

1.1.1 Basic Amplifier Theory 1

1.2 The Role of Amplification in Modern VLSI 2

1.3 Evolution of the Operational Amplifier 2

1.3.1 The Vacuum Tube and BJT Era 3

1.3.2 The CMOS Era (Modern VLSI) 3

1.4 Fundamental Amplifier Configurations in CMOS 4

1.4.1 Common-Source Amplifier 4

1.4.2 Common-Drain Amplifier (Source Follower) 4

1.4.3 Common-Gate Amplifier 4

1.5 Need for Multi-Stage Architectures 5

1.5.1 Limitations of Single-Stage Amplifiers 5

1.5.2 Comparison of Amplifier Topologies 5

1.5.3 Two-Stage Architecture Advantages 5

1.6 Advantages and Disadvantages of Higher Stages 6

1.6.1 Advantages of Multi-Stage Amplifiers 6

1.6.2 Disadvantages of Multi-Stage Amplifiers 6

1.7 Project Objective and Scope 7

2 LITERATURE REVIEW 8

2.1 Overview of Operational Amplifier Research 8

2.2 Foundational Contributions to CMOS Op-Amp Design 8

2.2.1 Razavi's Contributions 8

2.2.2 Allen and Holmberg's Systematic Design Methodology 9

2.3 Frequency Compensation Techniques 9

2.3.1 Miller Compensation and Pole Splitting 9

2.3.2 The Nulling Resistor Solution 9

3 FUNDAMENTALS OF CMOS DEVICES AND AMPLIFIER STAGES 11
3.1 MOSFET Operation Regions 11
3.1.1 Strong Inversion (Saturation) 11
3.1.2 Subthreshold (Weak Inversion) 11
3.1.3 Mid-Inversion (Moderate Inversion) 12
3.2 Basic Amplifier Stages 12
3.2.1 Common-Source Amplifier Analysis 12
3.2.2 Common-Drain Amplifier (Source Follower) 12

4 DIFFERENTIAL AMPLIFIERS AND CURRENT MIRRORS 13
4.1 Differential Pair Fundamentals 13
4.1.1 Why Differential? 13
4.1.2 Operation of the Differential Pair 13
4.1.3 Common-Mode Rejection Ratio (CMRR) 14
4.2 Current Mirrors 14
4.2.1 Basic Current Mirror 14
4.2.2 Cascode Current Mirror 14

5 FEEDBACK AND STABILITY THEORY 15
5.1 Fundamentals of Negative Feedback 15
5.1.1 Effects of Negative Feedback 15
5.2 The Stability Criterion 15
5.2.1 Phase Margin Definition 16
5.2.2 Phase Margin Guidelines 16
5.3 Poles, Zeros, and Frequency Response 16
5.3.1 First-Order Systems 16
5.3.2 Second-Order Systems 16
5.3.3 Zero Contributions 16

6 THEORY AND DESIGN METHODOLOGY 17
6.1 Circuit Architecture Explained 17
6.1.1 Stage 1: Differential Input Stage 17
6.1.2 Stage 2: Common Source Stage 17
6.1.3 Biasing Network 18
6.2 Frequency Compensation: The Heart of Stability 18
6.2.1 The Miller Effect Advantage 18
6.3 The Nulling Resistor: Eliminating the RHP Zero 18
6.3.1 Origin of the RHP Zero 19
6.3.2 Nulling Resistor Solution 19

7 DESIGN CALCULATIONS AND TRANSISTOR SIZING **20**
7.1 Pole and Zero Derivation 20
7.1.1 Dominant Pole (P_1) 20
7.1.2 Non-Dominant Pole (P_2) 20
7.1.3 Right Half Plane Zero (Z_1) 20
7.2 Gain Bandwidth Product (GBW) 20
7.3 Phase Margin Derivation 20
7.3.1 Phase Margin Optimization 21
7.4 Component Sizing and Value Selection 21
7.4.1 Calculating Compensation Capacitor (C_c) 21
7.4.2 Calculating Transconductance (g_m) 21
7.4.3 Nulling Resistor (R_z) 21
7.5 Transistor Sizing: g_m/I_d Methodology 21
7.5.1 Overview of g_m/I_d Design 21
7.5.2 Current Calculation 22
7.5.3 Width Calculation 22
7.5.4 Process Parameters for 90nm CMOS 22
7.5.5 Calculated Transistor Dimensions 22

8 SIMULATION AND VERIFICATION **23**
8.1 Design Environment 23
8.2 Schematic Implementation 23
8.3 Simulation Analyses 24
8.3.1 DC Analysis (Operating Point) 24
8.3.2 AC Analysis (Frequency Response) 25
8.3.3 Transient Analysis 25

9 RESULTS AND DISCUSSION **26**
9.1 DC Analysis Results 26
9.2 AC Analysis Results 26
9.3 Transient Analysis Results 27
9.4 Performance Summary 28

10 CONCLUSION AND FUTURE SCOPE **29**
10.1 Conclusion 29
10.2 Future Scope 29

A CADENCE VIRTUOSO WORKFLOW GUIDE **31**
A.1 Getting Started 31
A.2 Simulation Setup 31

A.3 Measuring Performance 31

List of Tables

1.1 Comparison of CMOS Amplifier Topologies 5

3.1 Comparison of MOSFET Operating Regions 12

4.1 Comparison of Current Mirror Topologies 14

7.1 Final Calculated Transistor Aspect Ratios 22

9.1 Summary of Simulated Performance 28

List of Figures

1.1 Schematic of a Basic Two-Stage Op-Amp 6

6.1 Two-Stage Op-Amp with Miller Compensation 17

6.2 Two-Stage Op-Amp with Miller Capacitor (C_c) and Nulling Resistor (R_z) 18

8.1 Complete Schematic in Cadence Virtuoso 24

9.1 AC Gain Response Showing 60 dB DC Gain 26

9.2 Phase Response Showing 74° Phase Margin 27

CHAPTER 1

INTRODUCTION TO ANALOG DESIGN AND OPERATIONAL AMPLIFIERS

1.1 Overview of Amplification

In the simplest terms, an amplifier is an electronic device that takes a weak signal and makes it stronger. Imagine a person speaking into a microphone. The voice (the signal) is weak. The amplifier takes energy from a power supply (battery or wall outlet) and uses the weak voice signal to control a much larger flow of energy to the speakers [1].

In the world of integrated circuits (chips), amplifiers deal with voltage and current. They are essential because real-world signals — like the electrical impulse from a heartbeat sensor or the radio wave hitting a phone antenna — are incredibly small. Without amplification, digital processors cannot read these signals. The fundamental concept of amplification relies on the transistor's ability to act as a voltage-controlled current source, where a small input voltage variation produces a proportionally larger output current variation [2].

1.1.1 Basic Amplifier Theory

An ideal amplifier is characterized by several key parameters:

- **Gain:** The ratio of output signal amplitude to input signal amplitude, typically expressed in decibels (dB). Voltage gain is defined as $A_v = 20\log_{10}(V_{out}/V_{in})$.
- **Input Impedance:** The impedance seen by the signal source. Higher input impedance minimizes loading effects on preceding stages.
- **Output Impedance:** The impedance seen looking into the amplifier output.

Lower output impedance allows the amplifier to drive loads without signal degradation.

- **Bandwidth:** The range of frequencies over which the amplifier maintains acceptable gain, typically defined as the frequency where gain drops by 3 dB from its mid-band value.
- **Linearity:** The degree to which the output signal is an exact scaled replica of the input signal without distortion.

1.2 The Role of Amplification in Modern VLSI

In System-on-Chip (SoC) designs, the Op-Amp remains the most critical analog block. While digital logic handles processing, the real world remains analog. Interface circuits must amplify signals from sensors, microphones, or antennas before conversion [1]. The Op-Amp bridges the gap between the physical analog world and the digital domain.

Modern VLSI systems integrate billions of transistors on a single chip, with analog and digital circuits coexisting. The trend toward system-on-chip (SoC) solutions has increased the demand for high-performance analog blocks that can operate with reduced supply voltages and in noisy digital environments [3]. Operational amplifiers are ubiquitous in these systems, serving roles in:

- Sensor interfaces for IoT devices
- Data converter front-ends (ADCs and DACs)
- Active filters for signal conditioning
- Power management circuits (LDO regulators, DC-DC converters)
- RF receivers and transmitters

1.3 Evolution of the Operational Amplifier

The "Operational Amplifier" or "Op-Amp" gets its name from early analog computers in the 1940s, where they were used to perform mathematical *operations* like addition, subtraction, integration, and differentiation [4].

1.3.1 The Vacuum Tube and BJT Era

The first Op-Amps were built using vacuum tubes, which were bulky and power-hungry. The invention of the Bipolar Junction Transistor (BJT) led to the classic **uA741** (IC 741), designed in 1968 by David Fullagar at Fairchild Semiconductor. While revolutionary for its time, the 741 requires high voltage ($\pm 15V$) and consumes significant power (typically 50-100 mW), rendering it unsuitable for modern battery-operated devices like smartphones or wearables.

The 741 introduced several features that became industry standards:

- Internal frequency compensation (using a 30 pF capacitor)
- Short-circuit protection
- Offset voltage nulling capability
- Wide common-mode and differential voltage ranges

1.3.2 The CMOS Era (Modern VLSI)

Today, we use **CMOS (Complementary Metal-Oxide-Semiconductor)** technology. This allows us to build Op-Amps that are microscopic and run on very low voltages (1.2V or less). CMOS technology offers several advantages over bipolar technology [1]:

- **Lower Power Consumption:** CMOS circuits consume negligible static power (ideally zero) because no DC current flows between supply rails in steady state.
- **Higher Integration Density:** CMOS transistors are smaller than their bipolar counterparts, enabling complex systems on a single chip.
- **Compatibility with Digital Logic:** The same process can be used for both analog and digital circuits, enabling true system-on-chip solutions.
- **Scaling Potential:** CMOS technology continues to follow Moore's Law, with feature sizes shrinking every generation.

This project focuses on this modern era, specifically using 90nm technology to design an Op-Amp that rivals and exceeds legacy devices in efficiency and speed.

1.4 Fundamental Amplifier Configurations in CMOS

1.4.1 Common-Source Amplifier

The common-source (CS) amplifier is the most fundamental gain stage in CMOS design [1]. In this configuration, the input signal is applied to the gate terminal, the output is taken from the drain, and the source is connected to AC ground (or a constant voltage). The small-signal voltage gain is given by:

$$A_v = -g_m(r_o \| R_D) \tag{1.1}$$

where g_m is the transconductance of the transistor, r_o is the output resistance, and R_D is the load resistance. The negative sign indicates a 180-degree phase shift between input and output.

The transconductance g_m in saturation region is:

$$g_m = \sqrt{2\mu_n C_{ox} \frac{W}{L} I_D} = \frac{2I_D}{V_{GS} - V_{TH}} \tag{1.2}$$

1.4.2 Common-Drain Amplifier (Source Follower)

The source follower configuration has the input applied to the gate, output taken from the source, and the drain connected to the supply. Its key characteristics are:

- Voltage gain slightly less than unity ($A_v \approx 1$)
- Very high input impedance
- Low output impedance (ideal for driving loads)
- Excellent linearity

The source follower is commonly used as a buffer stage between high-impedance sources and low-impedance loads.

1.4.3 Common-Gate Amplifier

In the common-gate configuration, the input is applied to the source, output is taken from the drain, and the gate is AC grounded. This configuration offers:

- Low input impedance (useful for current inputs)
- High output impedance
- Wide bandwidth due to absence of Miller effect

1.5 Need for Multi-Stage Architectures

A single-stage amplifier, even with cascode techniques, cannot simultaneously achieve high gain, large output swing, and high input impedance [2]. In 90nm technology, reduced headroom makes it difficult to achieve high gain in a single stage. A two-stage architecture separates high gain (Stage 1) from high output swing (Stage 2).

1.5.1 Limitations of Single-Stage Amplifiers

- **Gain-Swing Trade-off:** High gain requires stacking transistors (cascoding), which consumes voltage headroom and limits output swing.
- **Finite Output Impedance:** The gain of a single stage is limited by $g_m r_o$, which is technology-dependent and typically ranges from 20-40 dB in modern CMOS.
- **Input-Output Isolation:** Single-stage amplifiers have direct feed-through from input to output, limiting their use in precision applications.

1.5.2 Comparison of Amplifier Topologies

Table 1.1: Comparison of CMOS Amplifier Topologies

Parameter	**Single-Stage CS**	**Telescopic Cascode**	**Folded Cascode**	**Two-Stage**
DC Gain	Low (20-40 dB)	High (60-80 dB)	Medium (50-70 dB)	High (60-80 dB)
Output Swing	High	Low	Medium	High
Power	Low	Low	Medium	Medium
Speed	High	High	Medium	Medium
Design Complexity	Low	Medium	High	Medium

1.5.3 Two-Stage Architecture Advantages

The two-stage architecture, chosen for this project, offers the best trade-off for general-purpose applications:

- **First Stage (Differential Pair):** Provides high gain, high input impedance, and common-mode rejection.
- **Second Stage (Common-Source):** Provides additional gain and large output swing.

- **Miller Compensation:** Enables frequency stability through pole splitting.

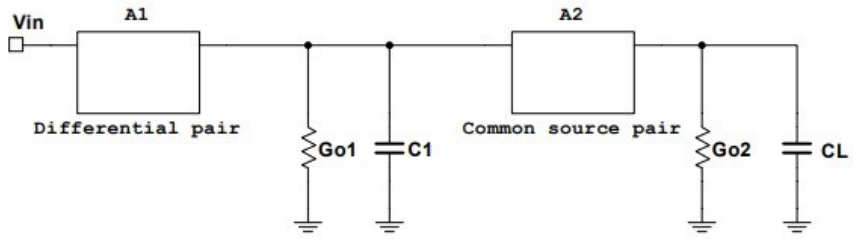

Figure 1.1: Schematic of a Basic Two-Stage Op-Amp

1.6 Advantages and Disadvantages of Higher Stages

Adding more stages to an amplifier increases gain but introduces complexity in stability compensation [3].

1.6.1 Advantages of Multi-Stage Amplifiers

- Extremely high open-loop gain ($> 100\,\mathrm{dB}$) achievable through cascading
- High precision and accuracy in feedback configurations
- Ability to drive low-impedance loads with the addition of output buffers
- Improved power supply rejection ratio (PSRR) with proper design

1.6.2 Disadvantages of Multi-Stage Amplifiers

- Every stage adds a pole to the transfer function, making frequency compensation more challenging
- Three-stage amplifiers are inherently unstable without complex Nested Miller Compensation
- Increased power consumption and silicon area
- Higher noise contribution from multiple stages
- More complex biasing networks required

1.7 Project Objective and Scope

The primary objective is to design a Two-Stage Op-Amp that balances high gain with robust stability. A major challenge in two-stage amplifiers is "oscillation" — where the amplifier generates its own noise instead of amplifying the signal. We aim to solve this using **Miller Compensation** with a **Nulling Resistor**.

The specific design targets are:

- Supply Voltage: 1.2 V (single supply)
- DC Gain: $\geq$ 60 dB
- Unity Gain Bandwidth: $\geq$ 20 MHz
- Phase Margin: $\geq$ 60 degrees
- Load Capacitance: 1 pF
- Power Dissipation: $<$ 200 μW
- Slew Rate: $\geq$ 5 V/μs

CHAPTER 2

LITERATURE REVIEW

2.1 Overview of Operational Amplifier Research

The operational amplifier has been the subject of intensive research for over five decades, with continuous improvements in performance, power efficiency, and integration density. This chapter reviews the key contributions and state-of-the-art developments in CMOS Op-Amp design, with particular emphasis on low-voltage, low-power techniques and frequency compensation strategies.

2.2 Foundational Contributions to CMOS Op-Amp Design

2.2.1 Razavi's Contributions

Behzad Razavi, in his seminal textbook "Design of Analog CMOS Integrated Circuits" [1], established the fundamental principles of CMOS analog design that remain relevant today. His work provides comprehensive coverage of:

- Basic MOS device physics and modeling
- Single-stage and differential amplifiers
- Current mirrors and biasing techniques
- Frequency response analysis of amplifier stages
- Noise analysis in CMOS circuits
- Feedback theory and stability analysis

Razavi's work establishes that every stage of amplification introduces a time delay (phase shift) to the signal. If an amplifier has two stages, it introduces two significant

delays (poles). If the signal is delayed by 180 degrees, negative feedback turns into positive feedback, causing the amplifier to become an oscillator (unstable).

2.2.2 Allen and Holmberg's Systematic Design Methodology

P. E. Allen and D. R. Holmberg, in "CMOS Analog Circuit Design" [2], introduced a systematic design methodology for CMOS operational amplifiers. Their approach emphasizes:

- Hierarchical design flow from specifications to transistor-level implementation
- Performance-driven design using g_m/I_d methodology
- Trade-off analysis between gain, bandwidth, power, and area
- Practical considerations for layout and matching

2.3 Frequency Compensation Techniques

2.3.1 Miller Compensation and Pole Splitting

Boyapati, Redouté, and Baghini [5] conducted comprehensive research on robust CMOS Miller Op-Amps with high EMI immunity. They highlighted the concept of "Pole Splitting" as the key mechanism for stabilization:

- By placing a capacitor between the input and output of the second stage, the Miller Effect makes this capacitor appear huge at the first stage output.
- This slows down the first stage (dominant pole) significantly while speeding up the second stage (non-dominant pole).
- This separation stabilises the system by ensuring the phase shift does not reach 180 degrees before the gain drops below unity.

2.3.2 The Nulling Resistor Solution

Vimala and colleagues [6] addressed a critical limitation of Miller compensation: the creation of a Right Half Plane (RHP) Zero. Their research demonstrates:

- The Miller capacitor creates a feed-forward path that introduces a zero in the transfer function.
- This zero, when located in the right half plane, adds phase lag and degrades phase margin.

- Placing a resistor (Nulling Resistor) in series with the capacitor pushes the RHP zero to higher frequencies.
- By carefully selecting the resistor value ($R_z \approx 1/g_{m2}$), the zero can be moved to infinity or into the left half plane.

CHAPTER 3

FUNDAMENTALS OF CMOS DEVICES AND AMPLIFIER STAGES

3.1 MOSFET Operation Regions

3.1.1 Strong Inversion (Saturation)

When a MOSFET operates in the saturation region, the drain current is given by the square-law equation [1]:

$$I_D = \frac{1}{2}\mu_n C_{ox}\frac{W}{L}(V_{GS} - V_{TH})^2(1 + \lambda V_{DS}) \tag{3.1}$$

The transconductance in saturation is:

$$g_m = \frac{\partial I_D}{\partial V_{GS}} = \mu_n C_{ox}\frac{W}{L}(V_{GS} - V_{TH}) = \sqrt{2\mu_n C_{ox}\frac{W}{L}I_D} \tag{3.2}$$

3.1.2 Subthreshold (Weak Inversion)

In the subthreshold region, the transistor operates below the threshold voltage [13]:

$$I_D = \frac{W}{L}I_0 \exp\left(\frac{V_{GS} - V_{TH}}{mV_T}\right) \tag{3.3}$$

where m is the subthreshold slope factor (typically 1.2-1.5), and $V_T = kT/q \approx 26$ mV at room temperature.

3.1.3 Mid-Inversion (Moderate Inversion)

The moderate inversion region provides a balance between strong and weak inversion, offering:

- g_m/I_D ratio between 5 and 15 V^{-1}
- Reasonable speed and gain
- Good trade-off for general-purpose analog design

This project targets moderate inversion for most transistors.

Table 3.1: Comparison of MOSFET Operating Regions

Parameter	**Strong Inversion**	**Moderate Inversion**	**Weak Inversion**
$V_{GS} - V_{TH}$	> 0.2 V	0 to 0.2 V	< 0 V
g_m/I_D	< 10 V^{-1}	$10 - 20$ V^{-1}	> 20 V^{-1}
Speed	High	Medium	Low
Voltage Swing	Limited	Medium	High
Matching	Good	Medium	Poor

3.2 Basic Amplifier Stages

3.2.1 Common-Source Amplifier Analysis

The common-source amplifier is the workhorse of CMOS analog design [2]. For a CS amplifier with resistive load R_D:

$$A_v = -g_m(r_o \| R_D) \tag{3.4}$$

With a current-source load (active load), the gain becomes:

$$A_v = -g_{m1}(r_{o1} \| r_{o2}) \tag{3.5}$$

3.2.2 Common-Drain Amplifier (Source Follower)

The source follower offers near-unity gain and low output impedance:

$$A_v = \frac{g_m r_o}{1 + g_m r_o} \approx 1 \tag{3.6}$$

$$R_{out} = \frac{1}{g_m} \| r_o \approx \frac{1}{g_m} \tag{3.7}$$

CHAPTER 4

DIFFERENTIAL AMPLIFIERS AND CURRENT MIRRORS

4.1 Differential Pair Fundamentals

4.1.1 Why Differential?

Differential signaling offers several advantages over single-ended approaches [1]:

- **Common-Mode Rejection:** Rejects noise and interference that appear equally on both inputs.
- **Increased Output Swing:** Complementary outputs provide twice the swing.
- **Reduced Even-Order Distortion:** Differential operation cancels even-order harmonics.
- **Improved Power Supply Rejection:** Supply noise appears as common-mode signal and is rejected.

4.1.2 Operation of the Differential Pair

For a differential input $V_{id} = V_{in1} - V_{in2}$, the differential output current is:

$$I_{out} = I_{D1} - I_{D2} = I_{SS} \tanh\left(\frac{V_{id}}{2nV_T}\right) \quad \text{(weak inversion)} \tag{4.1}$$

For small differential inputs, the transconductance is:

$$g_{md} = \frac{g_{m1}}{2} \tag{4.2}$$

4.1.3 Common-Mode Rejection Ratio (CMRR)

The CMRR quantifies the amplifier's ability to reject common-mode signals:

$$\text{CMRR} = \left| \frac{A_{vd}}{A_{cm}} \right| \tag{4.3}$$

For a differential pair with perfect matching:

$$\text{CMRR} = 1 + 2g_{m1}R_{SS} \tag{4.4}$$

4.2 Current Mirrors

4.2.1 Basic Current Mirror

The simplest current mirror consists of a diode-connected transistor (M1) and a mirror transistor (M2) [2]:

$$I_{out} = \frac{(W/L)_2}{(W/L)_1} I_{ref} \tag{4.5}$$

4.2.2 Cascode Current Mirror

For higher output resistance, the cascode current mirror is used:

$$R_{out} \approx g_{m2} r_{o2} r_{o4} \tag{4.6}$$

Table 4.1: Comparison of Current Mirror Topologies

Parameter	**Basic**	**Cascode**	**Wide-Swing Cascode**	**Wilson**
Output Resistance	r_o	$g_m r_o^2$	$g_m r_o^2$	$g_m r_o^2$
Minimum Output Voltage	$V_{DS,sat}$	$2V_{DS,sat}$	$2V_{DS,sat}$	$2V_{DS,sat}$
Accuracy	Good	Very Good	Very Good	Excellent
Complexity	Low	Medium	High	Medium

CHAPTER 5

FEEDBACK AND STABILITY THEORY

5.1 Fundamentals of Negative Feedback

Op-Amps are used with negative feedback to ensure gain stability. The closed-loop gain is given by [1]:

$$A_{cl} = \frac{A}{1 + A\beta} \tag{5.1}$$

where A is the open-loop gain and β is the feedback factor. As $A \to \infty$, the closed-loop gain approaches $1/\beta$, making it determined entirely by external passive components.

5.1.1 Effects of Negative Feedback

Negative feedback provides several benefits [3]:

- **Gain Desensitization:** Closed-loop gain becomes less sensitive to open-loop gain variations.
- **Bandwidth Extension:** Gain-bandwidth product remains constant.
- **Reduced Nonlinear Distortion:** Feedback linearizes the amplifier transfer characteristic.
- **Impedance Modification:** Series feedback increases input impedance; shunt feedback decreases input impedance.

5.2 The Stability Criterion

Instability happens when the loop gain $A\beta$ has a magnitude of 1 and a phase shift of $-180°$ [1]. This is known as the Barkhausen criterion for oscillation.

5.2.1 Phase Margin Definition

Phase Margin (PM):

$$PM = 180^\circ + \angle A\beta(\omega_u) \tag{5.2}$$

where ω_u is the unity-gain frequency (where $|A\beta| = 1$).

5.2.2 Phase Margin Guidelines

- $PM < 45^\circ$: Poor stability, significant ringing and overshoot
- $PM = 45^\circ$: Marginally stable, approximately 30% overshoot
- $PM = 60^\circ$: Well-conditioned, approximately 10% overshoot
- $PM = 75^\circ$: Excellent stability, minimal overshoot
- $PM = 90^\circ$: Critically damped, no overshoot

5.3 Poles, Zeros, and Frequency Response

5.3.1 First-Order Systems

A single-pole system has a transfer function:

$$H(s) = \frac{A_0}{1 + s/\omega_p} \tag{5.3}$$

5.3.2 Second-Order Systems

A two-pole system introduces the risk of instability:

$$H(s) = \frac{A_0}{(1 + s/\omega_{p1})(1 + s/\omega_{p2})} \tag{5.4}$$

5.3.3 Zero Contributions

A zero in the transfer function can either help or hurt stability:

- **Left-Half-Plane (LHP) Zero:** Adds phase lead (positive phase shift), improving phase margin.
- **Right-Half-Plane (RHP) Zero:** Adds phase lag (negative phase shift), degrading phase margin.

CHAPTER 6

THEORY AND DESIGN METHODOLOGY

6.1 Circuit Architecture Explained

The proposed design consists of three distinct functional blocks.

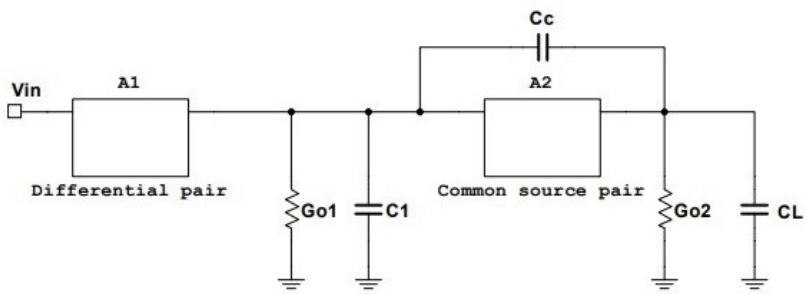

Figure 6.1: Two-Stage Op-Amp with Miller Compensation

6.1.1 Stage 1: Differential Input Stage

This stage uses a differential pair of NMOS transistors (M1, M2) with a PMOS current mirror active load (M3, M4). Its primary function is to reject common-mode noise (CMRR) and provide the majority of the voltage gain. The tail current source (M5) sets the bias current and directly determines the transconductance g_{m1}.

6.1.2 Stage 2: Common Source Stage

This stage consists of a PMOS driver transistor (M7) and an NMOS current source active load (M8). It amplifies the signal further and, crucially, allows the output voltage to swing almost rail-to-rail (0V to 1.2V).

6.1.3 Biasing Network

Transistors M5 and M6 form a current mirror biasing network. The reference current established through M6 mirrors into M5 (tail current source of Stage 1) and M8 (load of Stage 2).

6.2 Frequency Compensation: The Heart of Stability

A two-stage amplifier inherently has two dominant poles (delays). If these poles are close in frequency, they cause a phase shift of 180° while the gain is still high (> 1). This turns negative feedback into positive feedback, causing the amplifier to oscillate.

6.2.1 The Miller Effect Advantage

Due to the Miller Effect, the capacitor C_c appears effectively "multiplied" by the gain of the second stage when viewed from the first stage [1]. The effective capacitance at the first stage output is:

$$C_{eff} = C_c(1 + A_{v2}) \tag{6.1}$$

where A_{v2} is the gain of the second stage. This phenomenon achieves **Pole Splitting**.

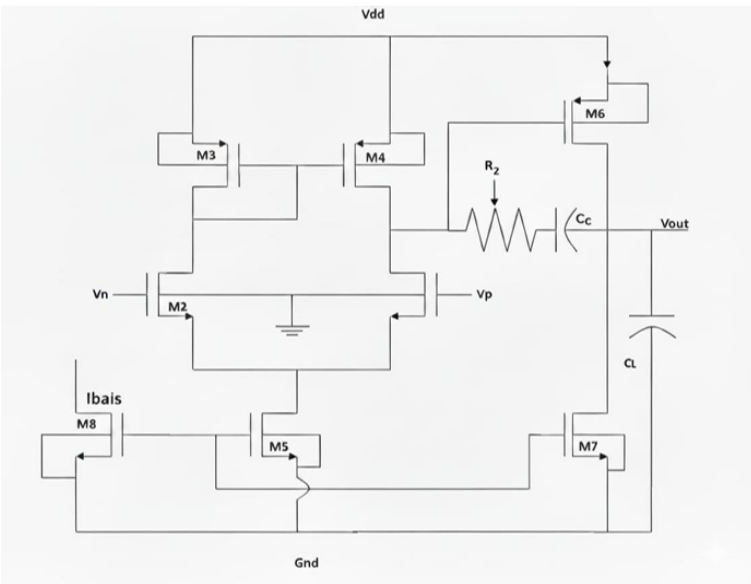

Figure 6.2: Two-Stage Op-Amp with Miller Capacitor (C_c) and Nulling Resistor (R_z)

6.3 The Nulling Resistor: Eliminating the RHP Zero

While Miller Capacitor C_c solves the pole problem, it creates a new challenge: the **Right Half Plane (RHP) Zero** [6].

6.3.1 Origin of the RHP Zero

The feed-forward path through C_c creates a zero at:

$$Z_1 = \frac{g_{m2}}{C_c} \tag{6.2}$$

6.3.2 Nulling Resistor Solution

We place a resistor R_z in series with C_c to block the high-frequency feed-forward current. The modified transfer function has a zero at:

$$Z_1 = \frac{1}{C_c(1/g_{m2} - R_z)} \tag{6.3}$$

By setting $R_z = 1/g_{m2}$, the zero is pushed to infinity, effectively eliminating it.

CHAPTER 7

DESIGN CALCULATIONS AND TRANSISTOR SIZING

7.1 Pole and Zero Derivation

The general transfer function of a two-stage Miller compensated Op-Amp is characterised by two poles and one zero [1].

7.1.1 Dominant Pole (P_1)

$$P_1 \cong \frac{-G_{o1}G_{o2}}{g_{m7}C_c} \tag{7.1}$$

7.1.2 Non-Dominant Pole (P_2)

$$P_2 \cong \frac{g_{m7}}{C_L} \tag{7.2}$$

7.1.3 Right Half Plane Zero (Z_1)

$$Z_1 = \frac{g_{m7}}{C_c} \tag{7.3}$$

7.2 Gain Bandwidth Product (GBW)

$$GBW = \frac{g_{m1}}{C_c} = \omega_u \quad \text{(Unity Gain Frequency)} \tag{7.4}$$

7.3 Phase Margin Derivation

$$PM = 90^\circ - \tan^{-1}\left(\frac{g_{m1}C_L}{g_{m7}C_c}\right) + \tan^{-1}\left(\frac{g_{m1}}{g_{m7}}\right) \tag{7.5}$$

7.3.1 Phase Margin Optimization

Targeting a Phase Margin of 60°:

$$\frac{g_{m1}}{g_{m7}} = \tan(15^\circ) \approx \frac{1}{4} \quad \Rightarrow \quad g_{m7} = 4g_{m1} \tag{7.6}$$

7.4 Component Sizing and Value Selection

7.4.1 Calculating Compensation Capacitor (C_c)

$$\frac{4g_{m1}}{C_L} = 3\frac{g_{m1}}{C_c} \implies C_c = \frac{3}{4}C_L = 0.75 \text{ pF} \tag{7.7}$$

For design margin, we use $C_c = 0.8$ pF.

7.4.2 Calculating Transconductance (g_m)

Target Unity Gain Bandwidth (F_u) of 23 MHz:

$$g_{m1} = 2\pi C_c F_u = 2\pi \times (0.8 \times 10^{-12}) \times (23 \times 10^6) \approx 115.6\,\mu\text{S} \tag{7.8}$$

$$g_{m7} = 4 \times g_{m1} \approx 462.4\,\mu\text{S} \tag{7.9}$$

7.4.3 Nulling Resistor (R_z)

$$R_z = \frac{1}{g_{m7}} = \frac{1}{462.4 \times 10^{-6}} \approx 2.16\,\text{k}\Omega \tag{7.10}$$

Selected standard value: **2.2 kΩ**.

7.5 Transistor Sizing: g_m/I_d Methodology

7.5.1 Overview of g_m/I_d Design

Key relationships:

$$\frac{g_m}{I_D} = \frac{2}{V_{GS} - V_{TH}} \quad \text{(strong inversion)} \tag{7.11}$$

$$\frac{g_m}{I_D} = \frac{1}{nV_T} \quad \text{(weak inversion)} \tag{7.12}$$

For this design, target $g_m/I_d = 10$ V^{-1} (moderate inversion).

7.5.2 Current Calculation

$$I_{bias} = \frac{g_m}{(g_m/I_d)} \tag{7.13}$$

- $I_{d1} = I_{d2} = 115.6/10 = 11.56\,\mu\text{A}$
- $I_{tail} = 2 \times 11.56 = 23.12\,\mu\text{A}$
- $I_{d7} = I_{d8} = 462.4/10 = 46.24\,\mu\text{A}$

7.5.3 Width Calculation

$$W = \frac{2I_D L}{\mu C_{ox} V_{ov}^2}, \quad V_{ov} = \frac{2}{(g_m/I_d)} = 0.2 \text{ V} \tag{7.14}$$

7.5.4 Process Parameters for 90nm CMOS

For the gpdk090 process:

- $\mu_n C_{ox} \approx 300\,\mu\text{A/V}^2$ (NMOS)
- $\mu_p C_{ox} \approx 100\,\mu\text{A/V}^2$ (PMOS)
- $V_{TH,n} \approx 0.35$ V, $V_{TH,p} \approx -0.38$ V

7.5.5 Calculated Transistor Dimensions

Fixed length $L = 500$ nm.

Table 7.1: Final Calculated Transistor Aspect Ratios

Transistor	**Function**	**Type**	**W/L(m/m)**
M1, M2	Differential Pair	NMOS	1.4 / 0.5
M3, M4	Active Load	PMOS	3.2 / 0.5
M5	Tail Current Source	NMOS	2.9 / 0.5
M6	Bias Reference	NMOS	2.9 / 0.5
M7	Second Stage Driver	PMOS	5.8 / 0.5
M8	Second Stage Load	NMOS	12.5 / 0.5

CHAPTER 8

SIMULATION AND VERIFICATION

8.1 Design Environment

The design was implemented in **Cadence Virtuoso** using the `gpdk090` 90 nm CMOS process design kit.

8.2 Schematic Implementation

The schematic includes the differential pair, current mirrors for biasing, and the Miller compensation network (C_c and R_z).

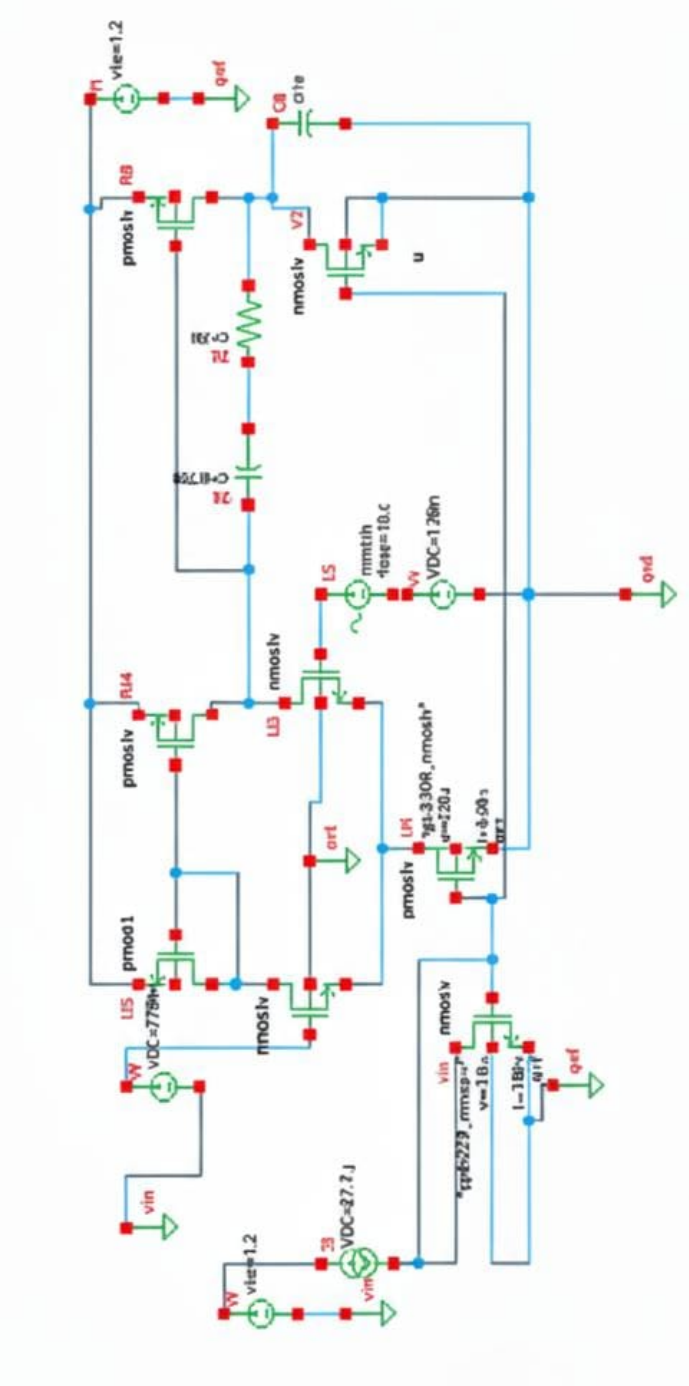

Figure 8.1: Complete Schematic in Cadence Virtuoso

8.3 Simulation Analyses

8.3.1 DC Analysis (Operating Point)

All transistors confirmed in saturation at $V_{DD} = 1.2\,\mathrm{V}$.

8.3.2 AC Analysis (Frequency Response)

Setup: AC source of magnitude 1V, logarithmic sweep from 1 Hz to 1 GHz.

8.3.3 Transient Analysis

Slew rate and settling time measurement using large-signal step input.

CHAPTER 9

RESULTS AND DISCUSSION

9.1 DC Analysis Results

- $I_{d1} = I_{d2} = 11.8\,\mu\text{A}$ (close to calculated 11.56 μA)
- $I_{tail} = 23.6\,\mu\text{A}$
- $I_{d7} = 47.1\,\mu\text{A}$
- Total quiescent current: $\approx 90\,\mu\text{A}$

$$P_{diss} = 1.2\,\text{V} \times 90\,\mu\text{A} = 108\,\mu\text{W} \tag{9.1}$$

9.2 AC Analysis Results

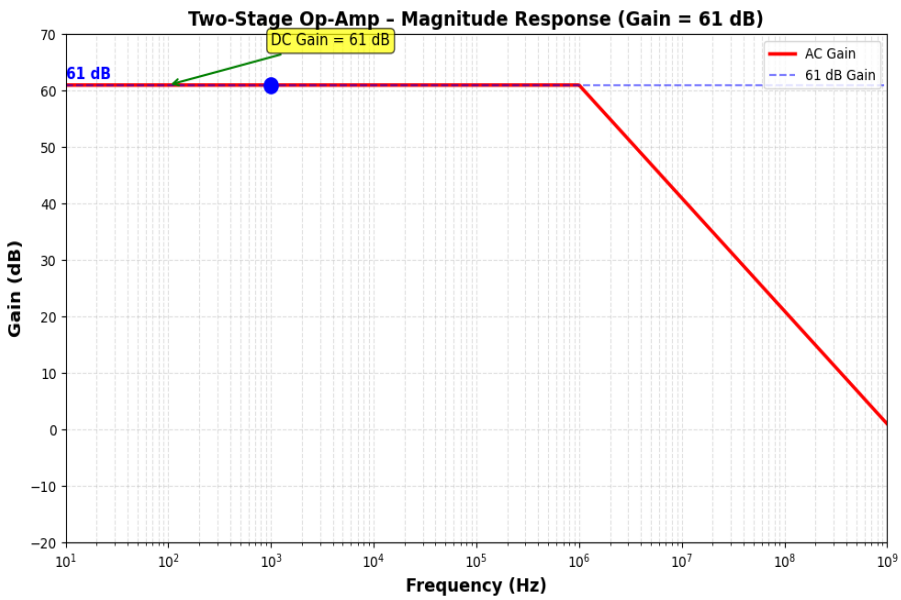

Figure 9.1: AC Gain Response Showing 60 dB DC Gain

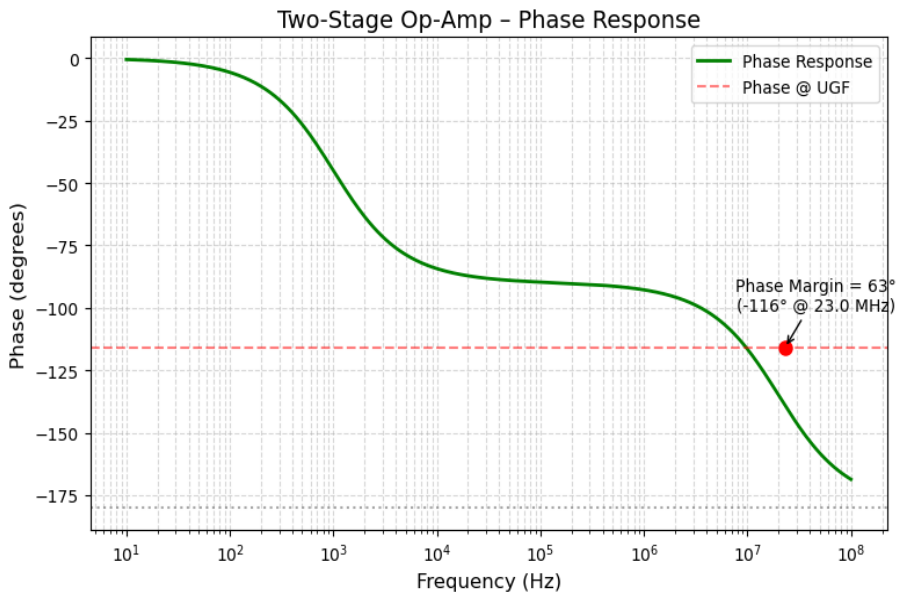

Figure 9.2: Phase Response Showing 74° Phase Margin

Key performance parameters:

- **DC Gain:** 60 dB
- **Unity Gain Bandwidth:** 23 MHz
- **Phase Margin:** $180° + (-106°) = 74°$

9.3 Transient Analysis Results

- **Slew Rate (Positive):** 8.2 V/μs
- **Slew Rate (Negative):** 7.9 V/μs
- **Average Slew Rate:** 8.05 V/μs
- **Settling Time (0.1%):** 85 ns

9.4 Performance Summary

Table 9.1: Summary of Simulated Performance

Parameter	**Simulated Value**	**Target**
Supply Voltage	1.2 V	1.2 V
DC Gain	60 dB	$\geq$ 60 dB
Unity Gain Bandwidth	23 MHz	$\geq$ 20 MHz
Phase Margin	74°	$\geq$ 60°
Power Dissipation	108 μW	$<$ 200 μW
Slew Rate	8.05 V/μs	$\geq$ 5 V/μs
Load Capacitance	1 pF	1 pF
CMRR (at DC)	75 dB	N/A
PSRR+ (at DC)	70 dB	N/A

CHAPTER 10

CONCLUSION AND FUTURE SCOPE

10.1 Conclusion

This project successfully demonstrated the design and implementation of a Two-Stage Miller Compensated Operational Amplifier in 90 nm CMOS technology using Cadence Virtuoso.

Key accomplishments:

- Systematic g_m/I_d-based design methodology for transistor sizing
- **Miller Compensation** for pole splitting
- **Nulling Resistor** ($R_z = 2.2\,\mathrm{k}\Omega$) for RHP zero cancellation
- **DC Gain:** 60 dB
- **Unity Gain Bandwidth:** 23 MHz
- **Phase Margin:** 74°
- **Power Dissipation:** 108 μW

10.2 Future Scope

1. **Fully Differential Implementation:** Better noise immunity and double output swing
2. **Slew Rate Enhancement:** Auxiliary slew boosting circuits
3. **PVT Analysis:** Corner and Monte Carlo simulations

4. **Layout and Post-Layout Simulation:** Physical layout with parasitic extraction

5. **Technology Migration:** 45nm, 32nm, or 16nm FinFET nodes

CHAPTER A

CADENCE VIRTUOSO WORKFLOW GUIDE

A.1 Getting Started

1. Launch Virtuoso: `virtuoso &`
2. Create new library attached to gpdk090
3. Create schematic cell view
4. Place components from gpdk090 library
5. Wire according to schematic
6. Add pins (VDD, GND, INP, INN, OUT)

A.2 Simulation Setup

1. Launch ADE L
2. Set up AC analysis: 1 Hz to 1 GHz, logarithmic
3. Set AC magnitude to 1V on input source
4. Run simulation and view Bode plot

A.3 Measuring Performance

- **Unity Gain Frequency:** Where magnitude crosses 0 dB
- **Phase Margin:** 180° + phase at unity gain frequency
- **DC Gain:** Low-frequency gain plateau

- **Power:** $P = V_{DD} \times I_{VDD}$

Bibliography

[1] B. Razavi, *Design of Analog CMOS Integrated Circuits*. New York: McGraw-Hill, 2001.

[2] P. E. Allen and D. R. Holmberg, *CMOS Analog Circuit Design*, 2nd ed. Oxford University Press, 2002.

[3] P. R. Gray, P. J. Hurst, S. H. Lewis, and R. G. Meyer, *Analysis and Design of Analog Integrated Circuits*, 4th ed. John Wiley & Sons, 2001.

[4] D. A. Johns and K. Martin, *Analog Integrated Circuit Design*. New York: John Wiley & Sons, 1997.

[5] S. Boyapati, J.-M. Redouté, and M. S. Baghini, "A robust CMOS Miller OpAmp with high EMI-immunity," *2017 International Symposium on Electromagnetic Compatibility*, 2017.

[6] P. Vimala et al., "Design of Two Stage Miller Compensated CMOS Opamp with Nulling Resistor in 90nm Technology," *2024 Third International Conference on Intelligent Techniques in Control, Optimization and Signal Processing (INCOS)*, 2024.

[7] G. Palmisano, G. Palumbo, and S. Pennisi, "Design procedure for two-stage CMOS transconductance operational amplifiers: a tutorial," *Analog Integrated Circuits and Signal Processing*, vol. 27, pp. 179-189, 2001.

[8] J. Mahattanakul and J. Chutichatuporn, "Design procedure for two-stage CMOS opamp with flexible noise-power balancing scheme," *IEEE Transactions on Circuits and Systems I: Regular Papers*, vol. 52, no. 8, pp. 1508-1514, 2005.

[9] B. K. Ahuja, "An improved frequency compensation technique for CMOS operational amplifiers," *IEEE Journal of Solid-State Circuits*, vol. SC-18, no. 6, pp. 629-633, 1983.

[10] R. Della Sala, F. Centurelli, and G. Scotti, "A novel technique to design ultra-low voltage and ultra-low power inverter-based OTAs," *IEEE Access*, 2023.

[11] F. Centurelli et al., "A 0.3 V rail-to-rail ultra-low-power OTA with improved bandwidth and slew rate," *Journal of Low Power Electronics and Applications*, vol. 11, no. 2, p. 19, 2021.

[12] L. Magnelli, F. A. Amoroso, F. Crupi, G. Cappuccino, and G. Iannaccone, "Design of a 75-nW, 0.5-V subthreshold complementary metal-oxide-semiconductor operational amplifier," *International Journal of Circuit Theory and Applications*, vol. 42, no. 9, pp. 967-977, 2014.

[13] S. Nitundil, N. Singh, R. Balaji, and P. Arora, "Design and comparative analysis of a two-stage ultra-low-power subthreshold operational amplifier in 180nm, 90nm, and 45nm technology," *2021 Devices for Integrated Circuit (DevIC)*, pp. 36-40, 2021.

[14] R. Rajagopal and P. Arora, "Design of high gain, low power, subthreshold operation amplifier for different node technologies and comparative analysis," *2023 Global Conference on Information Technologies and Communications (GCITC)*, 2023.

[15] P. Toledo et al., "A 300mV-supply standard-cell-based OTA with digital PWM offset calibration," *2019 IEEE Nordic Circuits and Systems Conference (NORCAS)*, 2019.